Project	
Project Name	
Fixture Location	
Date	

LIGHT SOURCE COB LED

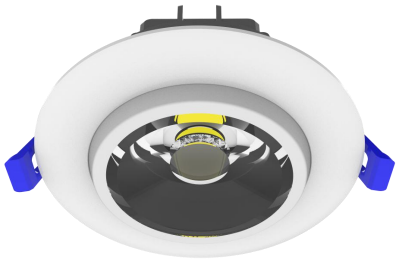

RRCEL4-A-02 | Remodel

RRCEL4-A-02-02 | New Construction

DESCRIPTION

- 4" rotatable LED eyeball downlight.

FEATURES

- Protected LED driver performs at 120V. (120-277V is available.)
- Beam Angle: 30/60 Degree.

DIMENSIONS

Remodel

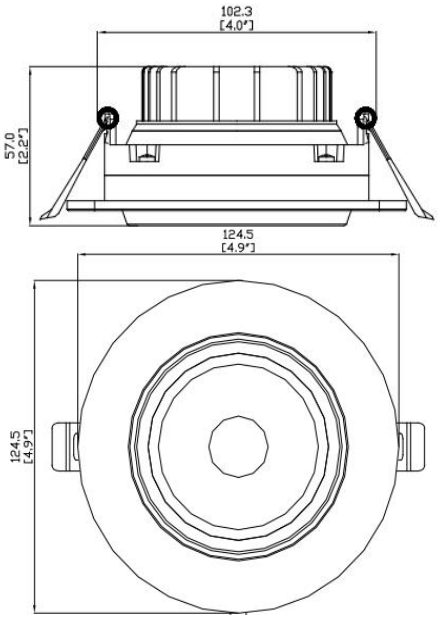

New Construction

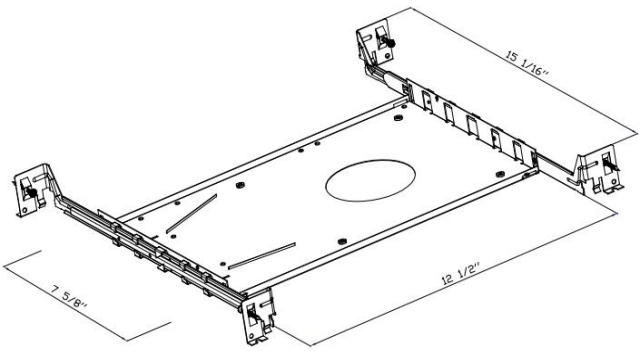

SPECIFICATIONS	
DESCRIPTION	LED DOWNLIGHT
FINISH	BLACK/WHITE
MOUNTING	RECESSED
CRI	80/90+
CCT	2700/3000/4000/5000 K
BEAM ANGLE	30°/60°
SUITABLE LOCATION	DAMP
WARRANTY	3 YEARS
DIMMABLE	YES
MAXIMUM WATTAGE	15W
VOLTAGES	120V
DELIVERED LUMEN	1200lm

Phone: 818-877-0344 | Email: sales@rayoindustries.com | www.rayoindustries.com